FLO KING IN-TANK LAB SERIES FILTER SYSTEM

For tanks as small as a half-gallon and larger!

At last . . . an in-tank filter system small enough to use in a half-gallon (2-liter) beaker as well as tanks up to several gallons. Your choice of three filter cartridge sizes, plus the ease of clamping to most existing beakers and tanks using an adjustable bracket.

Pumps 1 to 400 gallons per hour (up to 1,500 liters/hour)

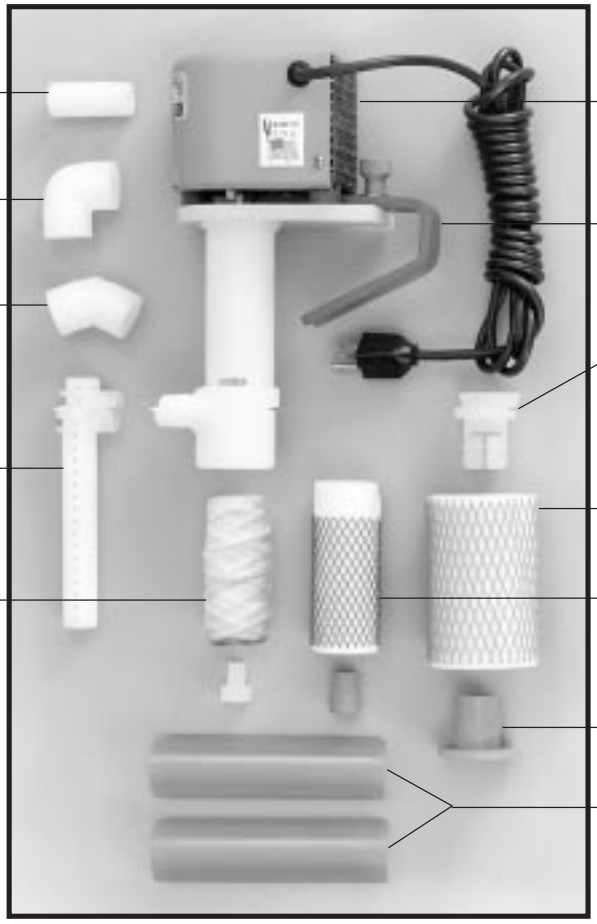

This is a ready-to-operate filter system complete with all accessories illustrated. It is powered by a super-quiet, ball-bearing, continuous-duty motor.

★ IF YOU NEED A FILTER SYSTEM TOMORROW CALL US TODAY ★

Pioneers of In-Tank Filtration ★ www.floking.com ★ e-mail: floking@sprintmail.com

CUSTOM MASTERS, INC. • 401 LAKE BENNETT CT., LONGWOOD, FL 32750-6341 USA • 407-331-4634 FAX 407-331-0575

FLO KING IN-TANK LAB SERIES FILTER SYSTEM

"Tomorrow's Filter Technology Today"

Introducing THE IN-TANK CONCEPT in small bath filtration—the **FLO KING** Lab Series system. This unit is ideal for laboratory, prototype, and small-tank production operations in clean settings. Like all **FLO KING** systems, it is a complete, pre-assembled unit that uses no out-of-tank apparatus and cannot leak or spill.

The Lab Series is small enough to filter a half-gallon beaker, yet powerful enough to use in small plating and related tanks—generally up to about 10 gallons (40 liters) but sometimes more, depending on agitation requirements, type of solution, and other factors. The flow rate is dependent on the filter element and attachments selected and ranges from 1 to 400 gallons per hour (1,500 liters per hour).

The Lab Series includes attachments to meet diverse agitation needs—two elbows for high flow and a directable dispersion tube ("Kurt Tube") for gentle, uniform circulation.

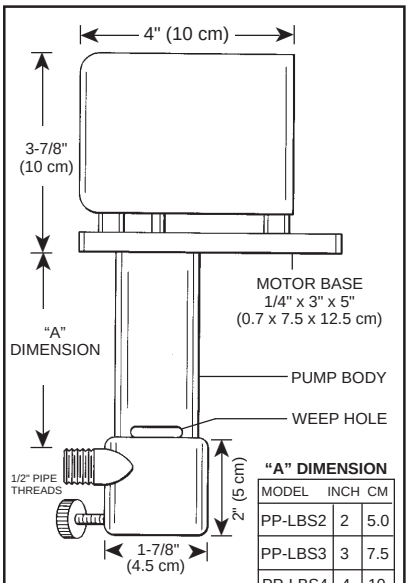

Important: To ensure proper operation, solution must always be above Weep Hole on pump body.

"A" DIMENSION

MODEL	INCH	CM
PP-LBS2	2	5.0
PP-LBS3	3	7.5
PP-LBS4	4	10
PP-LBS6	6	15

Three filter cartridge sizes are provided to satisfy most filtration requirements. The two "MAGNUM" filter cartridges are capable of filtering down below 1 micron and are reusable. The smaller, wound filter is a 5-micron disposable cartridge. In addition, a simple-to-attach adapter included in the Lab Series package enables the use of any standard 2-1/2"-diameter filter, including high-quality **FLO KING** Poly-Spun disposable cartridges.

Our adjustable Universal Bracket allows the filter system to be mounted easily on most tanks without the use of tools. The bracket also provides a secure mount on round beakers and glass battery jars.

The Lab Series filter system is a ready-to-use package requiring no tools or training to operate. It is supplied in 115 or 230 volts for your electrical needs and in different body lengths to satisfy the depth and freeboard of your container or tank. For sizing suggestions, just provide the information requested on Bulletin 12.1.

FLO KING LAB SERIES SPECIFICATIONS

PUMP: All-polypropylene construction with Teflon-covered stainless steel shaft. CPVC, PVDF (Kynar), and stainless-steel pump construction also available on special-order basis (call for pricing).

FLOW RATE: Up to 400 gallons per hour (1500 liters per hour) at 60 Hz, depending on type of filter cartridge and attachments used. A flow-rate reduction of 18%(±3%) is typical when operated at 50 Hz.

MOTOR: 1/70th horsepower (11 watt), single phase, 115/230 volts, 0.8A/0.4A, 50/60HZ, 2600/3000 RPM, Thermally Protected