FLO KING FILTER SYSTEMS™

IN-TANK TECHNOLOGY

The Original 4-in-1 FLO KING

Bulletin 15.5

FLO KING BX650

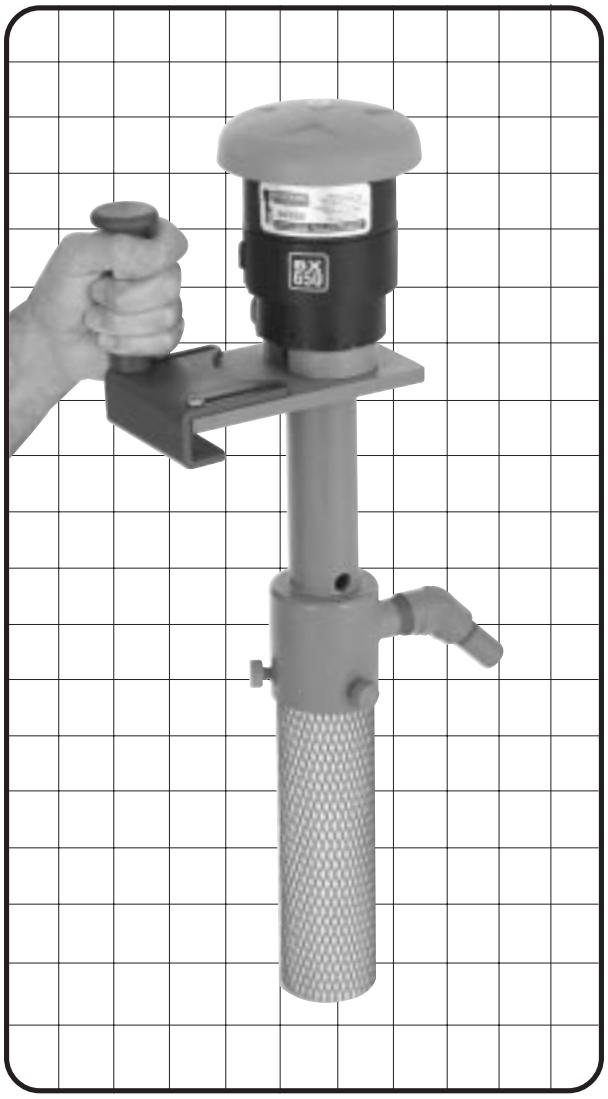

- **A FLOW RATE OF 650 GPH (2400 LPH) USING A TOTALLY ENCLOSED, FAN-COOLED MOTOR**
- **DEVELOPED FOR SMALL TO INTERMEDIATE-SIZE TANKS**
- **BUILT IN SEVERAL LENGTHS TO SATISFY FREEBOARD AND TANK DEPTH**
- **USE IN ONE LOCATION OR AS A PORTABLE PUMP IN MANY TANKS**
- **ACCEPTS STANDARD 2-1/2"-DIAMETER (6.35 cm) FILTER CARTRIDGES**

Base for mounting on tank is just 4 x 6" (10 x 15 cm).

Lightweight, easy-to-use BX650 is more powerful than the Lab Series but less potent than the BX1200. Can be used with popular BX1200 accessories, such as the Double Cartridge Holder, In-Tank Floating Skimmer, and carbon treatment attachments.

IF YOU NEED A FILTER SYSTEM TOMORROW CALL US TODAY

Pioneers of In-Tank Filtration ★ www.floking.com

CUSTOM MASTERS, INC. • 401 LAKE BENNETT CT., LONGWOOD, FL 32750-6341 USA • 407-331-4634 FAX 407-331-0575

THE FLO KING BX650

The BX650 provides a maximum flow rate of 650 gallons (2400 liters) per hour. Use it stationary on one tank or move it from tank to tank. Multiple body lengths (4", 6", 8", and 10") enable use of the BX650 in tanks with varying solution levels and depths.

The BX650 comes complete, preassembled, and ready to operate and includes the items shown in the labeled photograph below. For best results in most metal finishing solutions, use the BX650 with our PMCA Permacore "MAGNUM" reusable or FK50 Poly-Spun disposable filter cartridges in the appropriate length.

FLO KING BX650 SPECIFICATION

PUMP: All-CPVC or polypropylene construction with Teflon-covered stainless steel shaft. Pump also available in PVDF/Kynar and stainless steel (call for pricing).
FLOW RATE: 650 gallons per hour (2400 liters per hour) at 60 Hz. A flow-rate reduction of 18% (±3%) is typical when operated at 50 Hz.
PRESSURE: 10 feet (3 meters) of head pressure
WEIGHT: About 9 pounds (4 kg), depending on pump body length
MOTOR: Epoxy coated, rated at 1/15th HP (50 watt), single phase, 3000 rpm, TEFC, thermally protected. When ordering, specify one of the following three motors:

* 115 volts, 60 Hz, 2.6 A * 115 volts, 50/60 Hz, 2.0 A * 230 volts, 50/60 Hz, 1.3 A

RUNNING PUMP DRY DOES NOT DAMAGE MOTOR, PUMP, SEALS OR BEARINGS

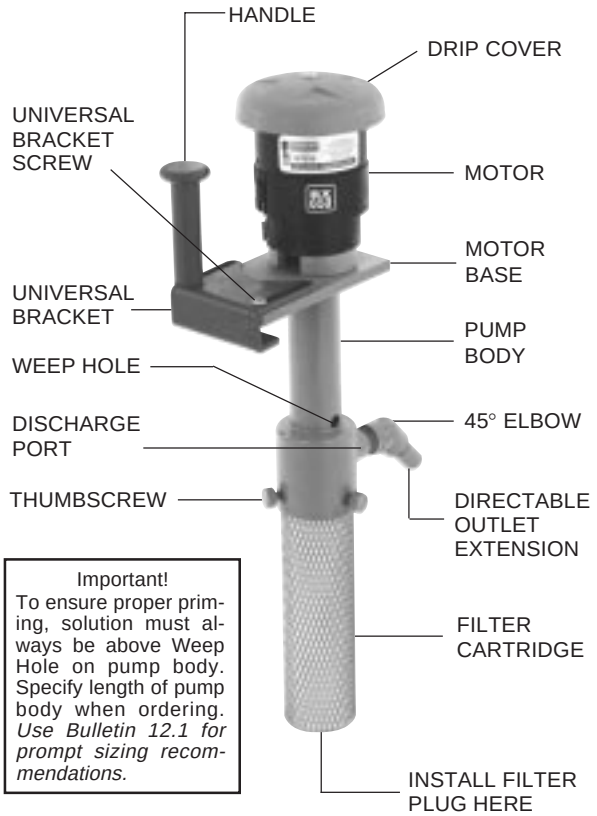

Important!
To ensure proper priming, solution must always be above Weep Hole on pump body. Specify length of pump body when ordering. *Use Bulletin 12.1 for prompt sizing recommendations.*

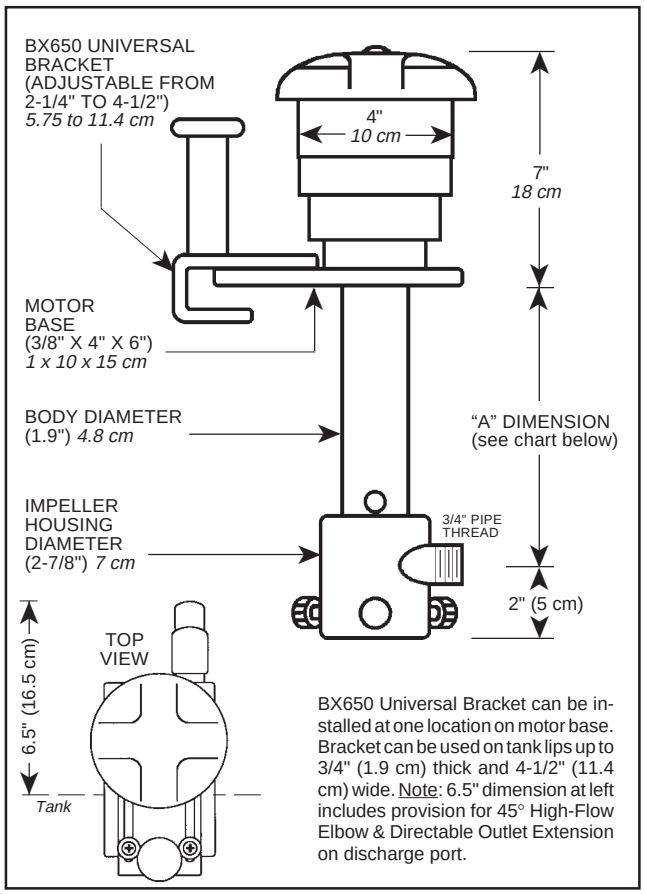

BX650 Universal Bracket can be installed at one location on motor base. Bracket can be used on tank lips up to 3/4" (1.9 cm) thick and 4-1/2" (11.4 cm) wide. Note: 6.5" dimension at left includes provision for 45° High-Flow Elbow & Directable Outlet Extension on discharge port.

MEASUREMENT FROM BOTTOM OF MOTOR BASE TO DISCHARGE PORT ("A" DIMENSION)				
PUMP MODEL	BX650-4	BX650-6	BX650-8	BX650-10
"A" DIMENSION	4-1/2" *(11 cm)*	6-1/2" *(17 cm)*	9-1/16" *(23 cm)*	10-3/4" *(28 cm)*

CUSTOM MASTERS, INC. • 401 LAKE BENNETT CT., LONGWOOD, FL 32750-6341 USA • 407-331-4634 FAX 407-331-0575